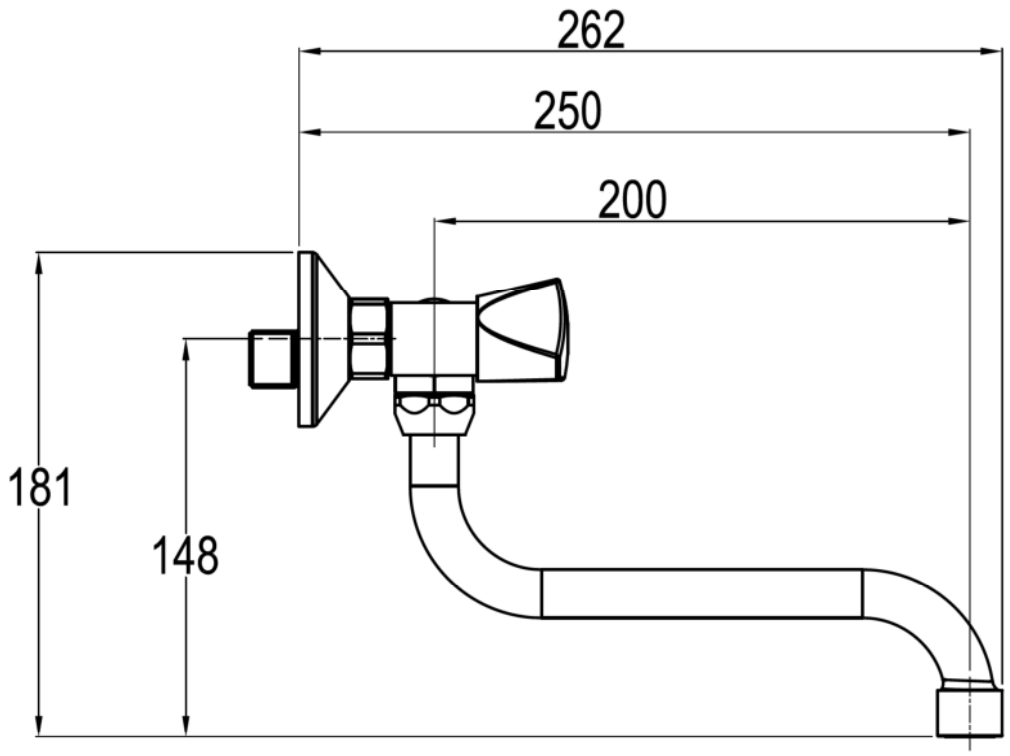
262
250
200
181
148

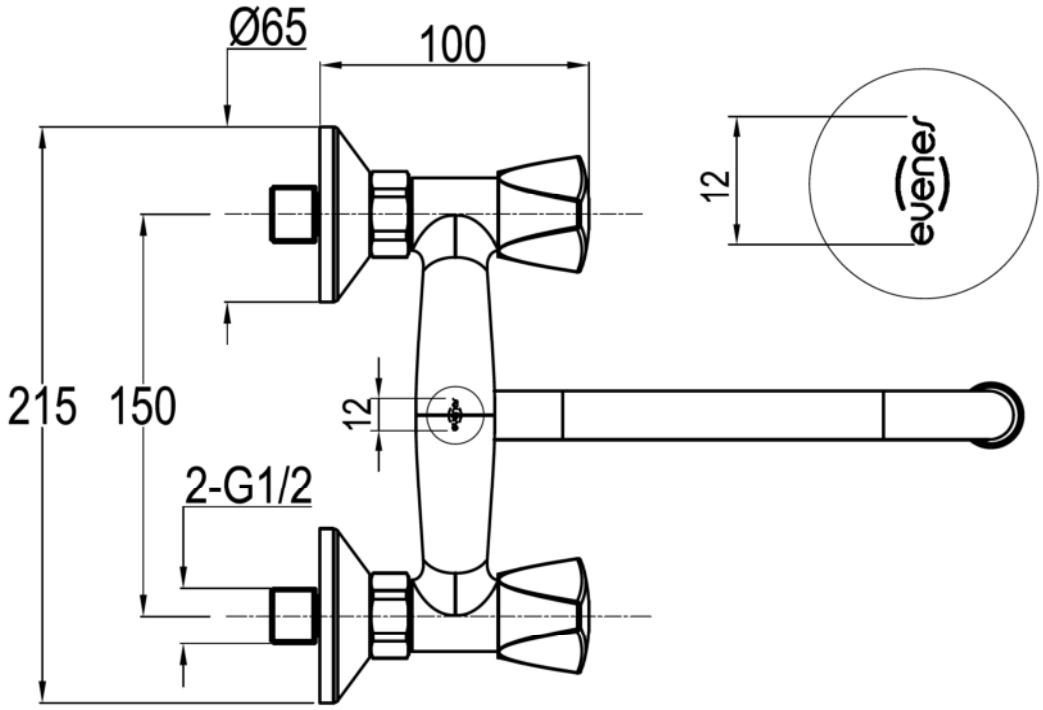
Ø65
100
12
evener
215
150
12
2-G1/2